# 12VDC AXIAL MOTOR FANS

**FAN DIAMETER**
**11" [280mm]**

| MODEL INFORMATION* | | | | | |
|---|---|---|---|---|---|
| PART# | TYPE | VOLTS | WATTS | BLADE | MATERIAL |
| G-4012-A | PULLER | 12VDC | 160W | "S" | MFGF NYLON |
| G-4012-S | PUSHER | 12VDC | 160W | "S" | MFGF NYLON |
| *ALSO AVAILABLE IN 24VDC | | | | | |

**REVERSIBLE**

**WATER & DUST RESISTANT**

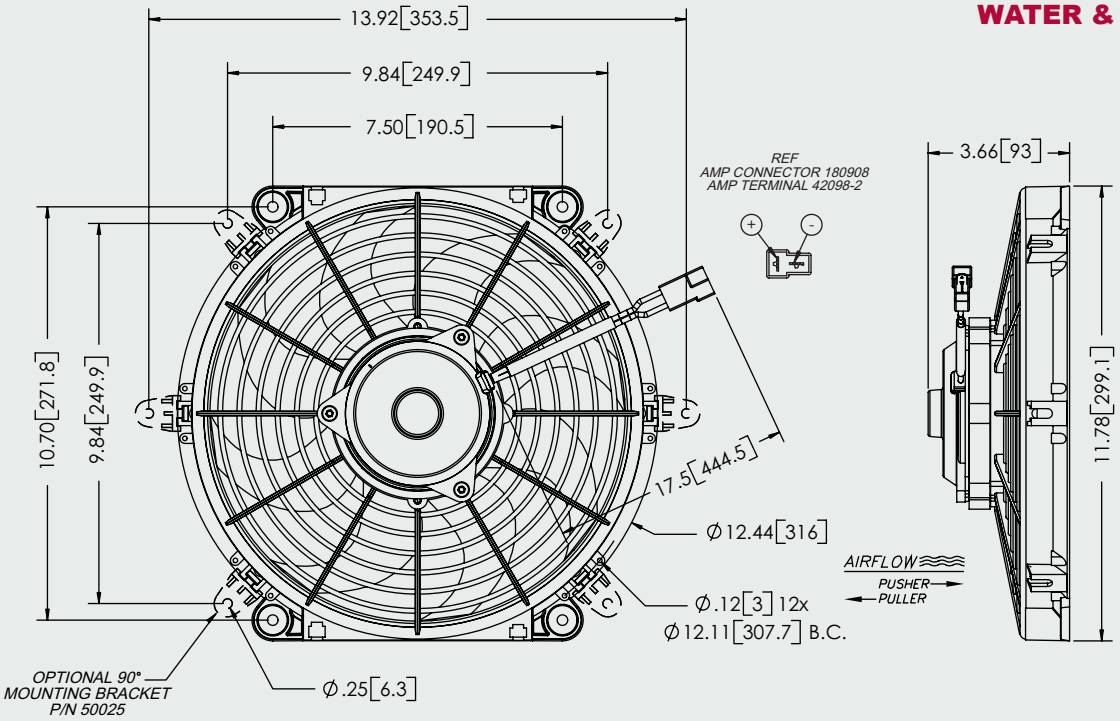


**TYPICAL AIR PERFORMANCE @ 13.5VDC**
11" 160W "S" BLADE PULLER/PUSHER FANS

| STATIC PRESSURE IN $H_20$ | STATIC PRESSURE mm $H_20$ | CFM | $m^3/h$ | Amps |
|---|---|---|---|---|
| 0 | 0.0 | 964 | 1368 | 11.4 |
| 0.1 | 2.5 | 886 | 1505 | 11.4 |
| 0.2 | 5 | 752 | 1278 | 11.2 |
| 0.3 | 7.5 | 563 | 957 | 10.4 |
| 0.4 | 10 | 428 | 727 | 10.6 |
| 0.5 | 12.5 | 328 | 557 | 10.9 |
| 0.6 | 15 | 205 | 348 | 10.9 |
| 0.7 | 17.5 | 76 | 129 | 11.2 |

STALL @ 0.79" [20.1mm] – 11.6 Amps

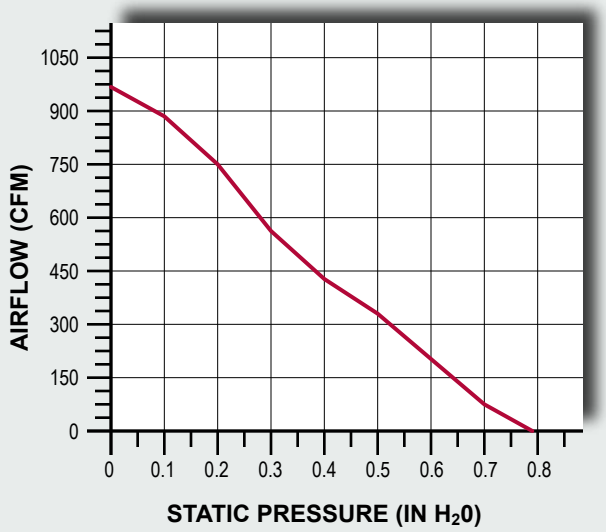


11" LOW PROFILE